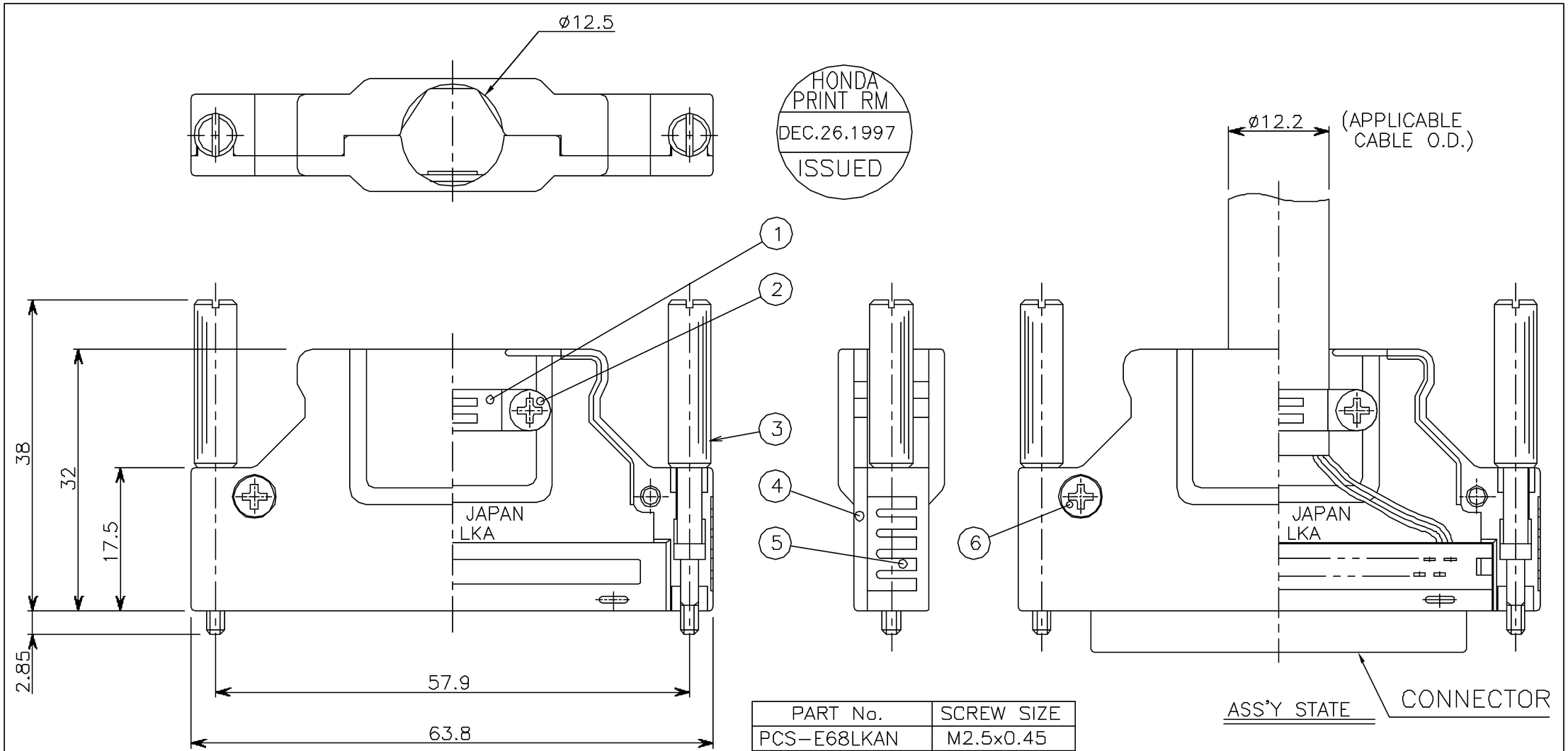

PART No.	SCREW SIZE
PCS-E68LKAN	M2.5x0.45
PCS-E68LKAUN	#4-40UNC
PCS-E68LKAU2N	#2-56UNC

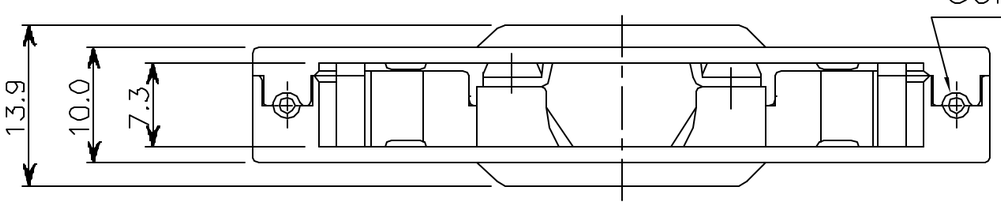

NO.	PART NAME	MATERIAL	QTY	FINISH	NOTE
6	⊕ FLAT HEAD SCREW	STEEL	2	NICKEL PLATING	M2.5
5	COVER B	ZINC ALLOY	1	NICKEL PLATING	——
4	COVER A	ZINC ALLOY	1	NICKEL PLATING	——
3	LOCK SCREW	STEEL	2	NICKEL PLATING	——
2	⊕ PAN HEAD SCREW	STEEL	2	NICKEL PLATING	M2.5
1	CABLE CLAMP	STAINLESS STEEL	1	——	——

LTR.	DATE	BY	REV. DESCRIPT
3			
2			
1			

DATE	SCALE	UNIT	
DEC.26.1997	2/1	mm(INCH)	3RD . A . P

DR	DE.	CHK	CHK	APP.

HONDA TSUSHIN KOGYO., LTD.

NAME	PCS-E TYPE 68POS. CABLE COVER(FOR SCSI)
PART NO.	PCS-E68LKA( )N

PCS-E68LKA@N E