PART NO.	NO. OF POS.	A	B	C	D	E	F	MARKING
PCS-XE26SFD ( )	26	37.2 (1.465)	31.2 (1.228)	1.27×(13−1)=15.24 (.05) (.60)	19.46 (.766)	27.05 (1.065)	20.00 (.787)	1, 13, 14, 26
PCS-XE50SFD ( )	50	52.5 (2.067)	46.5 (1.831)	1.27×(25−1)=30.48 (.05) (1.20)	34.70 (1.366)	42.29 (1.665)	35.24 (1.387)	1, 25, 26, 50
PCS-XE68SFD ( )	68	63.9 (2.516)	57.9 (2.280)	1.27×(34−1)=41.91 (.05) (1.65)	46.13 (1.816)	53.72 (2.115)	46.67 (1.837)	1, 34, 35, 68

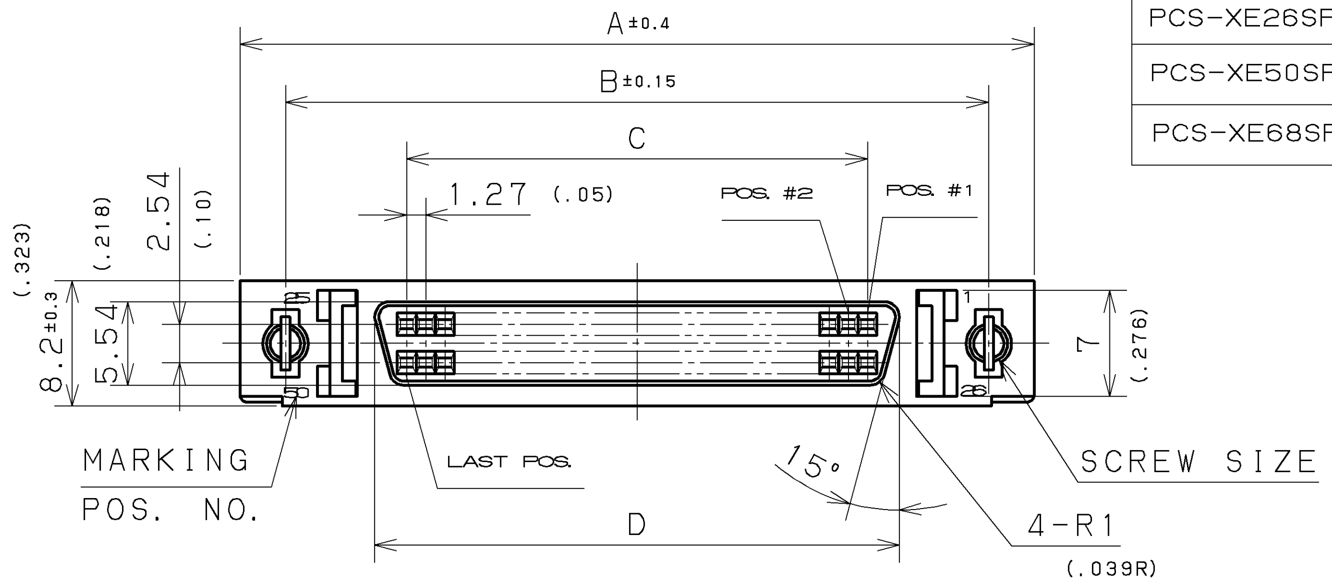

PART NO.	SCREW SIZE	ØG
PCS-XE ( ) SFD	M2.5×045	2.8 (.110 DIA.)
PCS-XE ( ) SFDU	#4-40UNC	3.05 (.120 DIA.)
PCS-XE ( ) SFDU2	#2-56UNC	2.5 (.098 DIA.)

PART NO.

PCS-XE50SFDU2

NO. OF POS.

SCREW SIZE

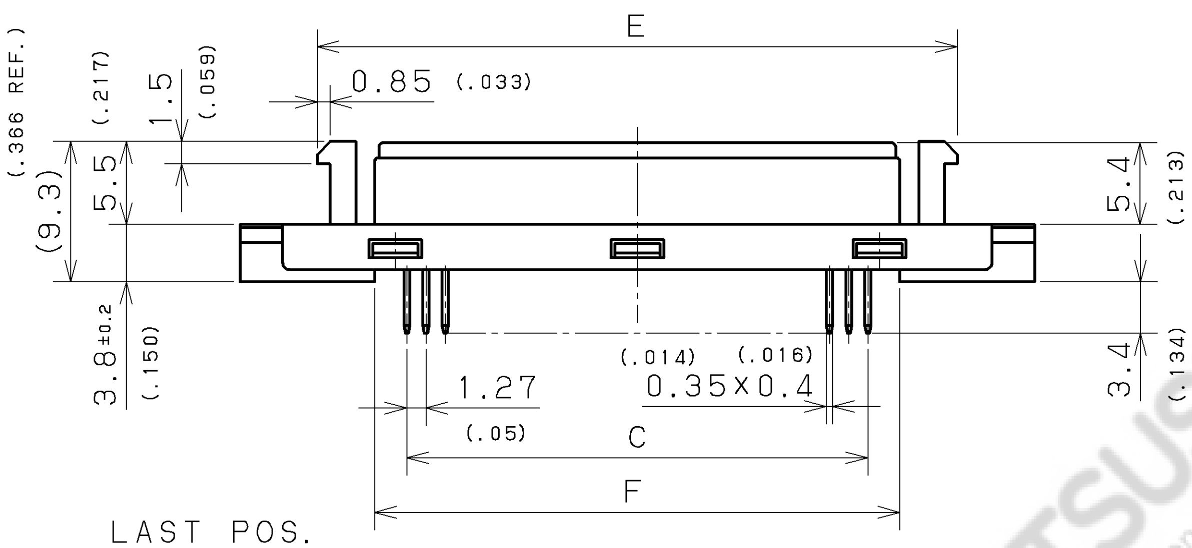

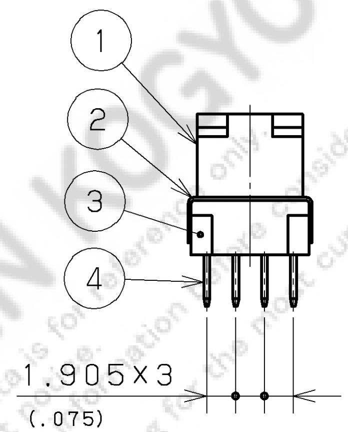

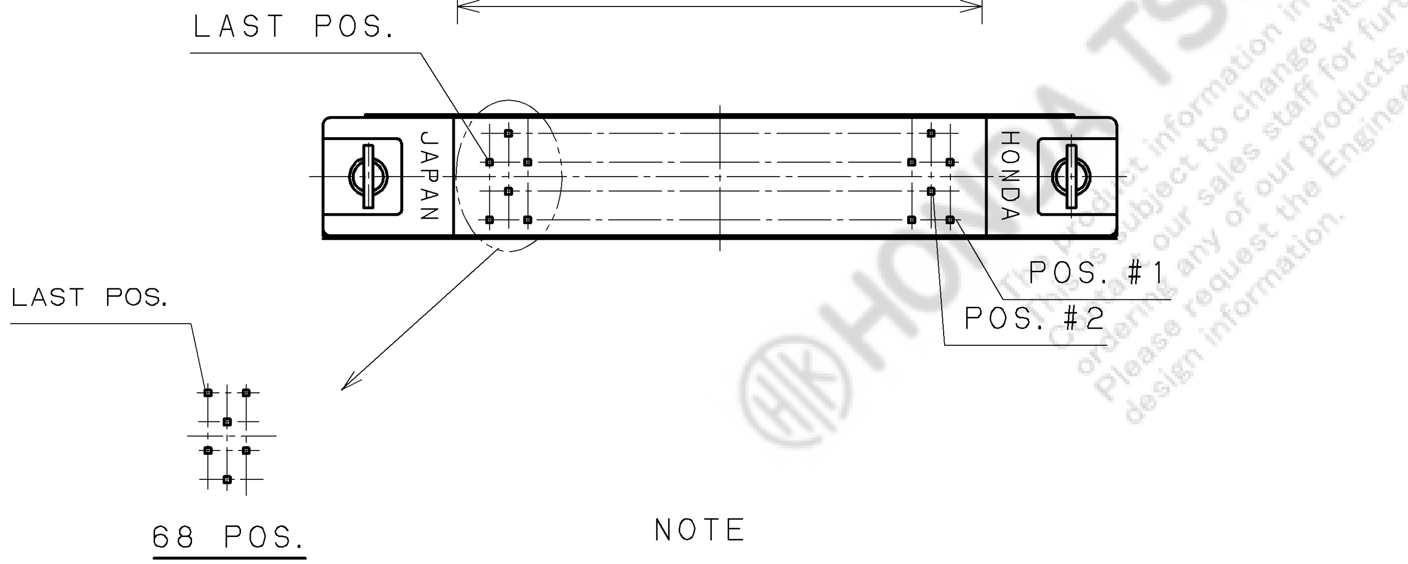

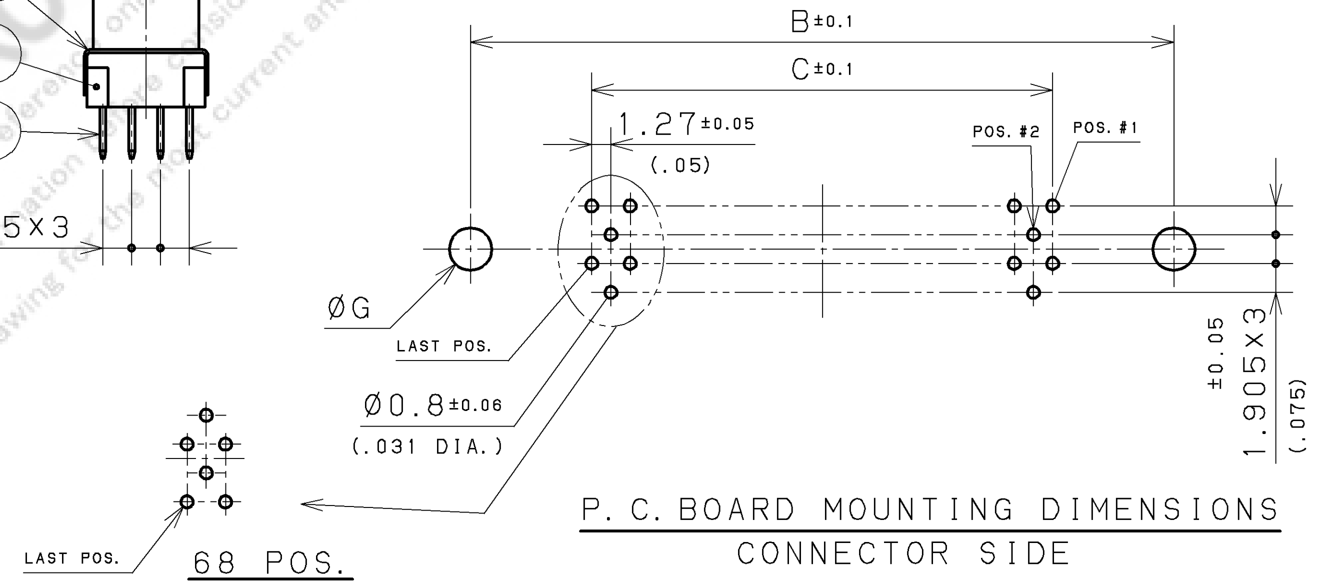

P. C. BOARD MOUNTING DIMENSIONS
CONNECTOR SIDE

P. C. BOARD THICKNESS: 1.6mm (.063)

NOTE

1. CONTACT FINISH
GOLD (0.20μm) ON MATING AREA,
TIN/LEAD ON TERMINATION AREA,
ALL OVER NICKEL.

改版 LTR.	年月日 DATE	変更者 BY	変更内容 REV. DESCRIPT	番号 No.	部品名称 PART NAME	材質 MATERIAL	個数 QTY	処理 FINISH	備考 NOTE
				4	CONTACT	PHOSPHOR BRONZE	NO. OF POS.	NOTE#1	
3				3	INSULATOR	PBT (GF)	1		UL94V-0 BLACK
2				2	SHELL II	STEEL	1	NICKEL PLATING	
1				1	SHELL I	ZINC ALLOY	1	NICKEL PLATING	

年月日 DATE	尺度 SCALE	単位 UNIT	3角法	
AUG. 25 94	2 1	mm (INCH)	3RD. A. P	本多通信工業株式会社 HONDA TSUSHIN KOGYO CO., LTD.

製図 DR.	設計 DE.	検図 CHK.	検図 CHK.	承認 APP.
S. FURUSAWA	S. FURUSAWA	Y. HIRAI	M. TAKAHASHI	K. TOKUDOME

名称 NAME	PCS-XE TYPE FEMALE CONNECTOR
製番 PART NO.	PCS-XE ( ) SFD ( )
REV.	

ID= PCS-XE@SFD@ EA

HONDA TSUSHIN KOGYO CO., LTD.
The product information in this data is for reference only. Contents are subject to change without notice. Contact our sales staff for further information before considering or ordering any of our products. Please request the Engineering Drawing for the most current and accurate design information.

PART NO.	NO. OF POS.	A	B	C	D	E	F	MARKING
PCS-XE26SFD ( ) G1	26	37.2 (1.465)	31.2 (1.228)	1.27× (13−1) =15.24 (.05) (.60)	19.46 (.766)	27.05 (1.065)	20.00 (.787)	1, 13, 14, 26
PCS-XE50SFD ( ) G1	50	52.5 (2.067)	46.5 (1.831)	1.27× (25−1) =30.48 (.05) (1.20)	34.70 (1.366)	42.29 (1.665)	35.24 (1.387)	1, 25, 26, 50
PCS-XE68SFD ( ) G1	68	63.9 (2.516)	57.9 (2.280)	1.27× (34−1) =41.91 (.05) (1.65)	46.13 (1.816)	53.72 (2.115)	46.67 (1.837)	1, 34, 35, 68

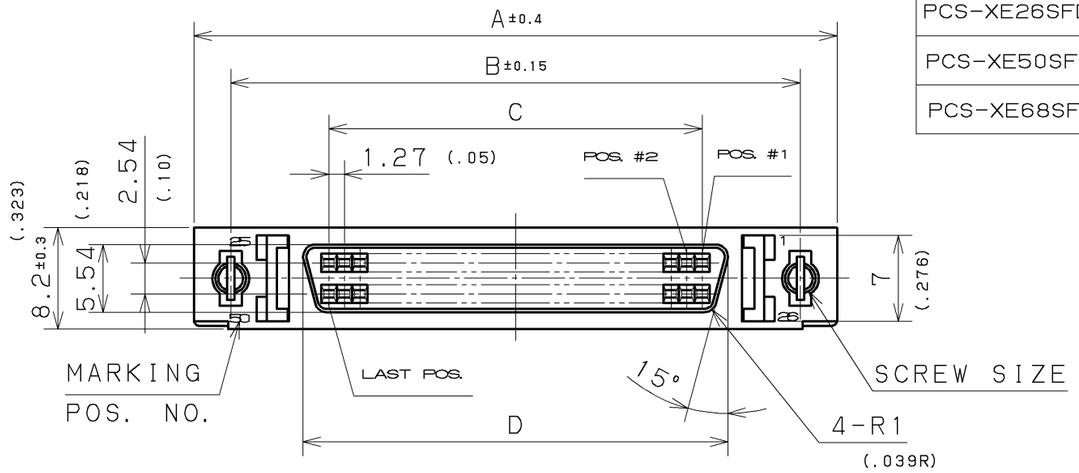

PART NO.	SCREW SIZE	ØG
PCS-XE ( ) SFDG1	M2.5×045	2.8 (.110 DIA.)
PCS-XE ( ) SFDUG1	#4-40UNC	3.05 (.120 DIA.)
PCS-XE ( ) SFDU2G1	#2-56UNC	2.5 (.098 DIA.)

PART NO.

PCS-XE50SFDU2G1

NO. OF POS.

SCREW SIZE

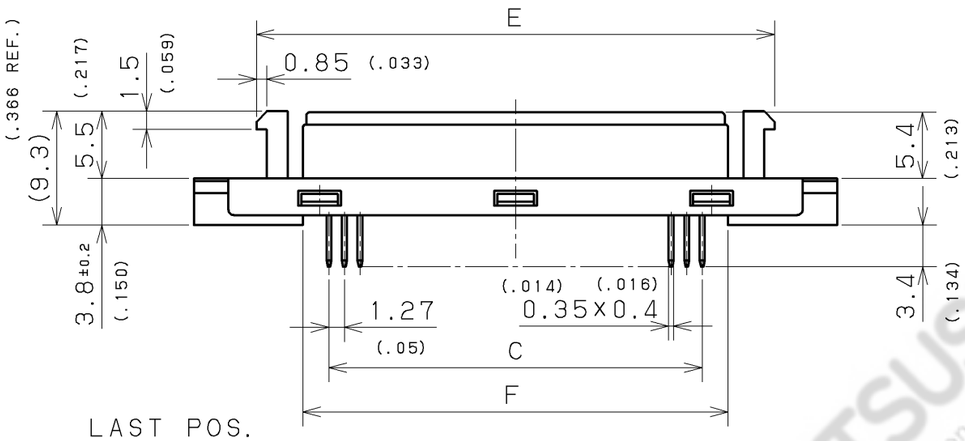

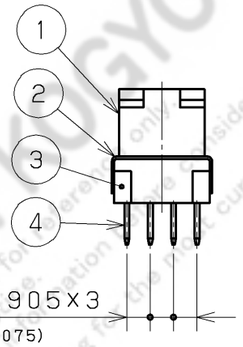

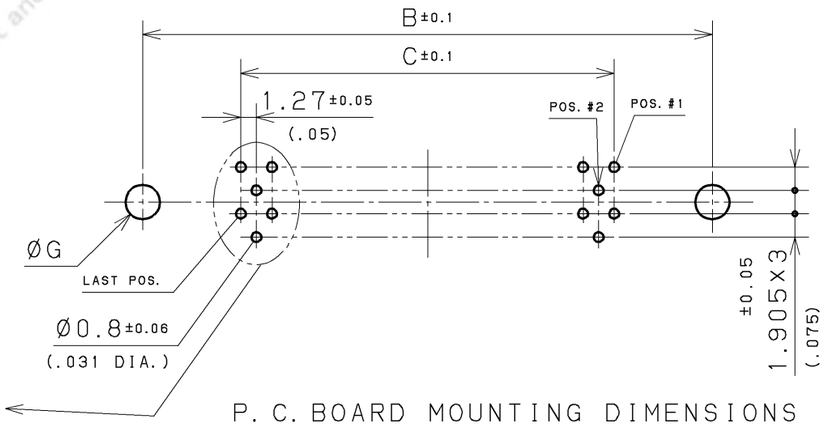

P. C. BOARD MOUNTING DIMENSIONS

CONNECTOR SIDE

P. C. BOARD THICKNESS: 1.6mm (.063)

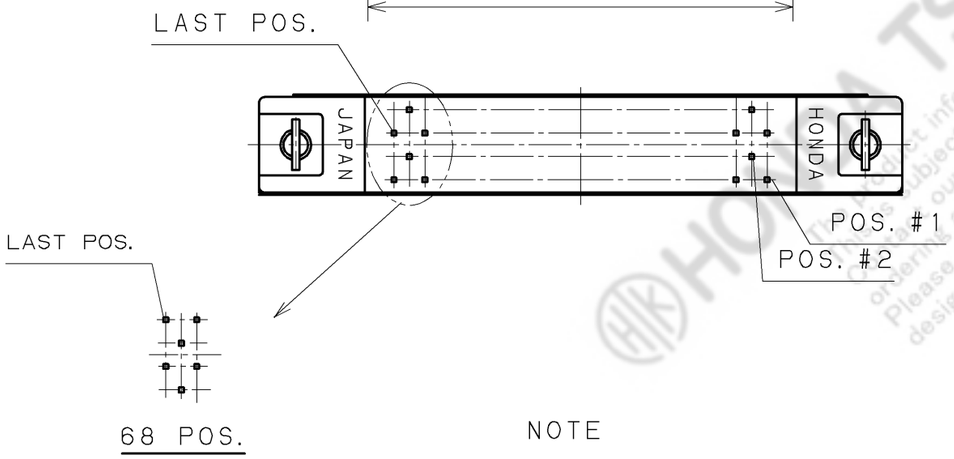

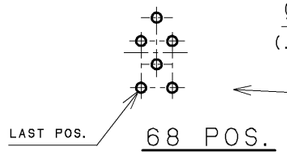

NOTE

1. CONTACT FINISH
   GOLD (0.76μm) ON MATING AREA,
   TIN/LEAD ON TERMINATION AREA,
   ALL OVER NICKEL.

改版 LTR.	年月日 DATE	変更者 BY	変更内容 REV. DESCRIPT	番号 No.	部品名称 PART NAME	材質 MATERIAL	個数 QTY	処理 FINISH	備考 NOTE
				4	CONTACT	PHOSPHOR BRONZE	NO. OF POS.	NOTE#1	
3				3	INSULATOR	PBT (GF)	1		UL94V-0 BLACK
2				2	SHELL II	STEEL	1	NICKEL PLATING	
1				1	SHELL I	ZINC ALLOY	1	NICKEL PLATING	

年月日 DATE	尺度 SCALE	単位 UNIT	3角法
AUG. 25 94	2 1	mm (INCH)	3RD. A. P

製図 DR.	設計 DE.	検図 CHK.	検図 CHK.	承認 APP.
S. FURUSAWA	S. FURUSAWA	Y. HIRAI	M. TAKAHASHI	K. TOKUDOME

本多通信工業株式会社
HONDA TSUSHIN KOGYO CO., LTD.

名称 NAME	PCS-XE TYPE FEMALE CONNECTOR	
製番 PART NO.	PCS-XE ( ) SFD ( ) G1	REV. A

ID= PCS-XE@SFD@G1 E0

HONDA TSUSHIN KOGYO CO., LTD.
The product information in this data is for reference only. Please contact our sales staff for further information before considering or ordering any of our products. Please request the Engineering Drawing for the most current and accurate design information.